BMT Co., Ltd.

SUPERLOK®

DN100 Gas Valve Unit (X-DF for WinGD) General Arrangement

(Doc No. : W5XGVU-SN2709-GAR)

B	2025 Jul. 23	Issued for approval	K.H.JEON	K.C.KIM	J.H.LIM
A	2025 Jan. 08	Issued for approval	K.H.JEON	K.C.KIM	J.H.LIM
Rev.	Date	Description	Prepared	Reviewed	Approved

Revision History

Rev	Status	Date	Revision Memo	Remark
A	IFA	2025.01.08	First Issue	
B	IFA	2025.07.23	1) Modified Work Space 2) Material changed from SUS304L to SUS316L 3) Revised total weight	

Engine Type	WinGD 5X72DF-2.2	**Description**	DN100 GAS VALVE UNIT (ED-Type)	**Hull No.**	SN2709/2710
Document No.	W5XGVU-SN2709-GAR			BMT Co., Ltd.	

TOP VIEW

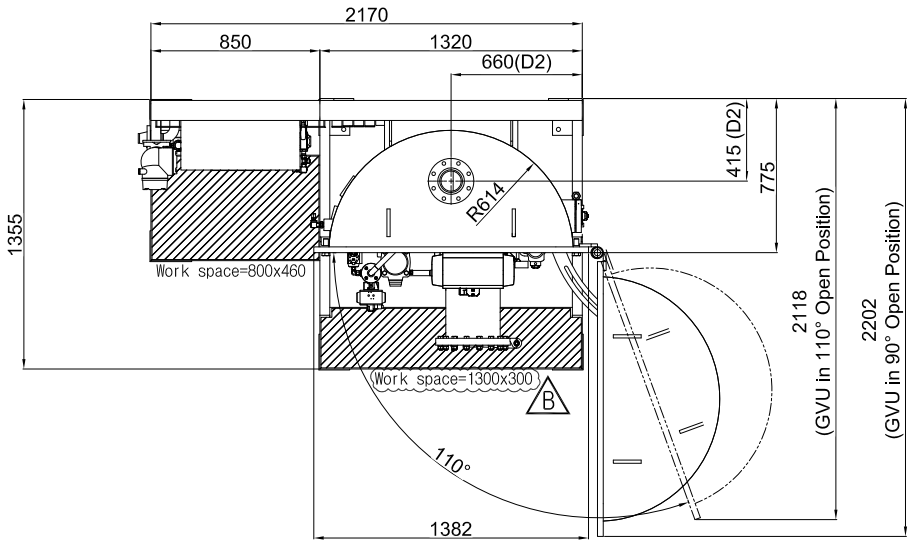

'A' VIEW

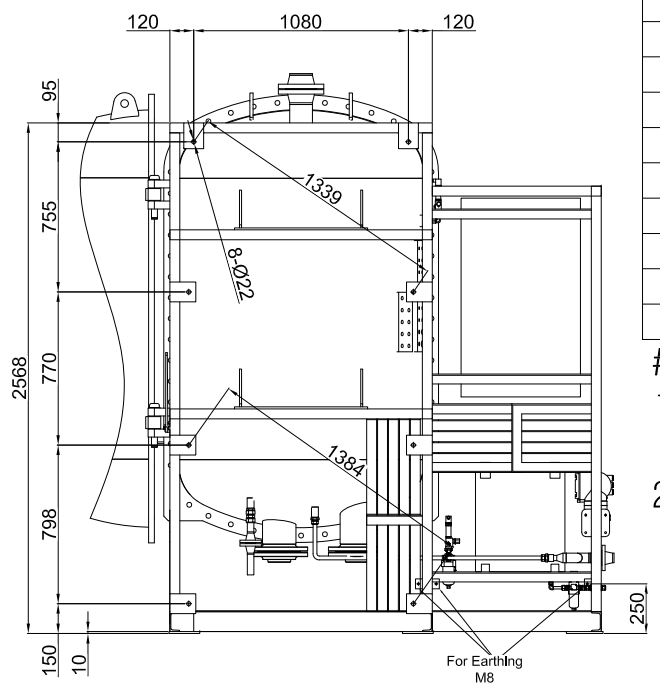

GVU SPECIFICATION

1	MEDIA FOR ENGINE	NATURAL GAS (CH4)
2	MEDIA FOR PURGE	NITROGEN
3	GAS TEMPERATURE	0~ 60° C
4	DESIGN PRESSURE	1.6 MPa
5	GAS INLET PRESSURE	1.3~1.6 MPa
6	GAS OUTLET PRESSURE	0.3~1.5 MPa
7	FLOW RATE	2,758 kg/h
8	NON-DESTRUCTIVE TEST	FUEL LINE - RT100%
9	ENCLOSURE DESIGN PRESSURE	1 MPa

EXTERNAL PIPE CONNECTIONS

NO.	DESCRIPTION	CONNECTION B	MATERIAL
A1	FUEL GAS INLET TO GVU	IN : 114.3 x 6 / FLANGE	SUS316L
		OUT : 168.3 x 3.4 / FLANGE	SUS316L
B1	FUEL GAS OUTLET TO ENGINE	IN : 114.3 x 6 / FLANGE	SUS316L
		OUT : 168.3 x 3.4 / FLANGE	SUS316L
X1	CONTROL AIR TO GVU	12 mm BITE TYPE	SUS316L
D1	FUEL GAS VENTILATION	33.4 x 3.4 / BW	SUS316L
B2	INERT GAS INLET	48.3 x 3.7 / WN FLANGE #150	SUS316L
D2	VENTILATION ON ENCLOSURE	114.3 x 6 / WN FLANGE #150	STPG370

Note

1. Counter Flanges & Connection kits are supplied by Maker (A1,B1,D1,B2,D2)
2. Total Weight : 2,100±100[kg] B

FRONT VIEW

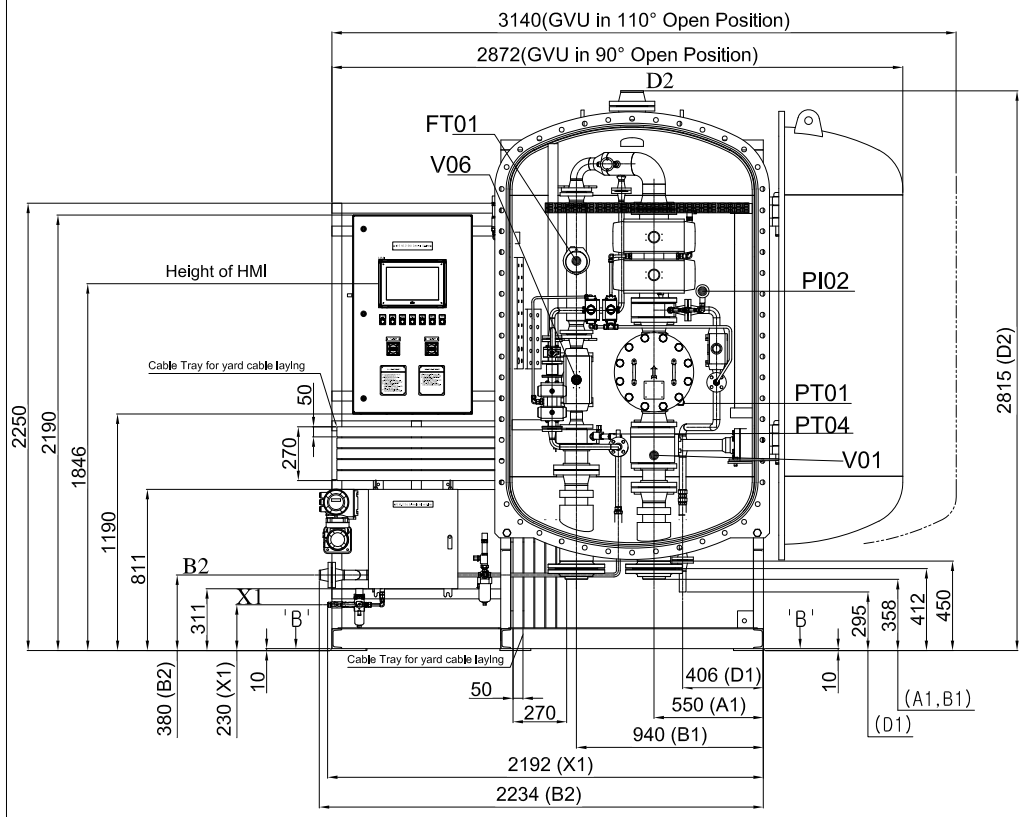

RIGHT VIEW

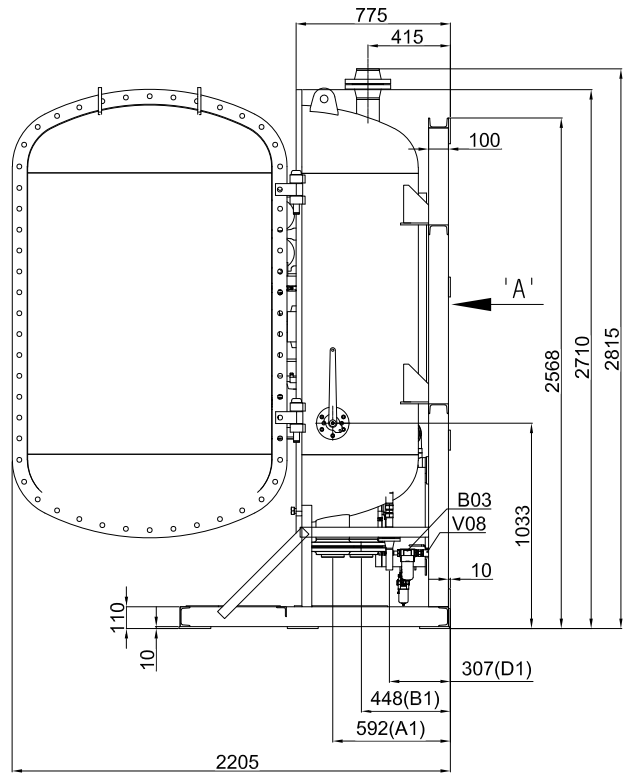

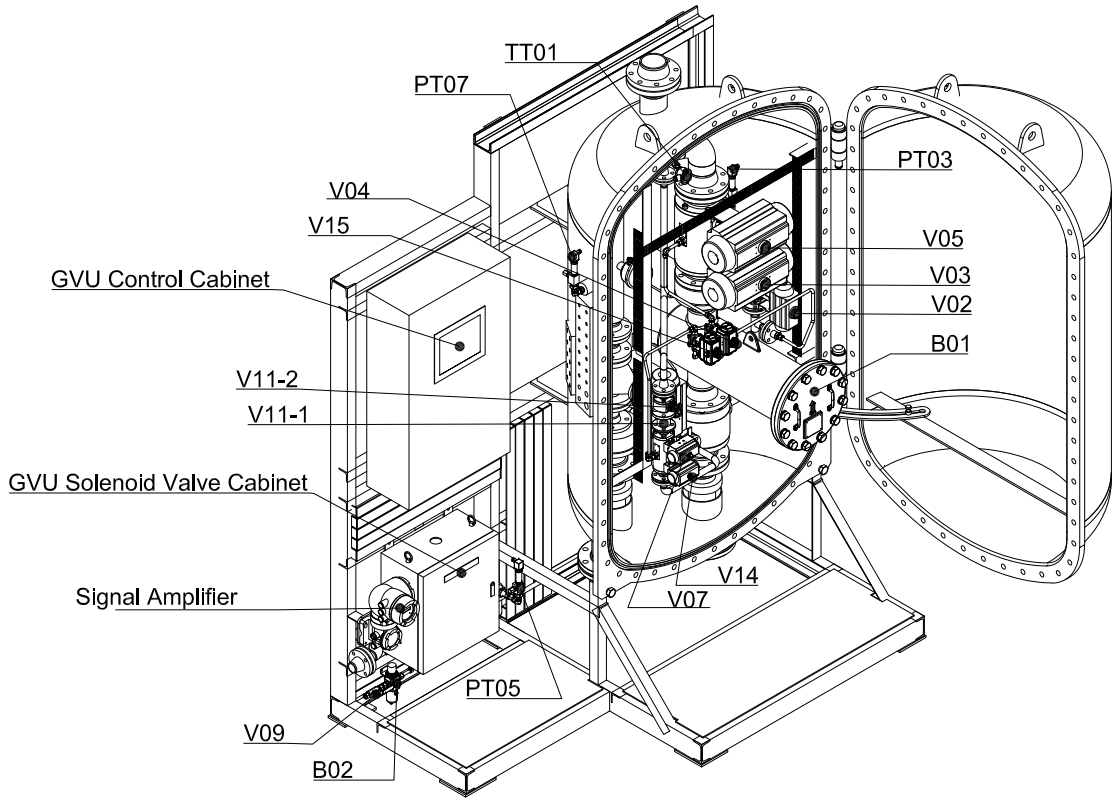

BOTTOM VIEW

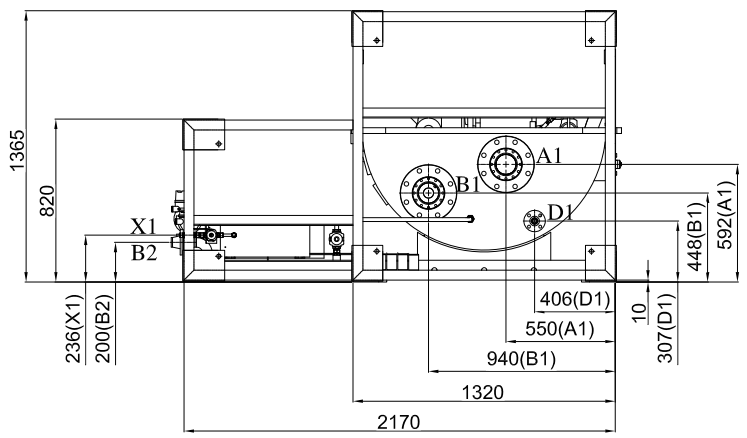

BOTTOM VIEW

BOLTING HOLE

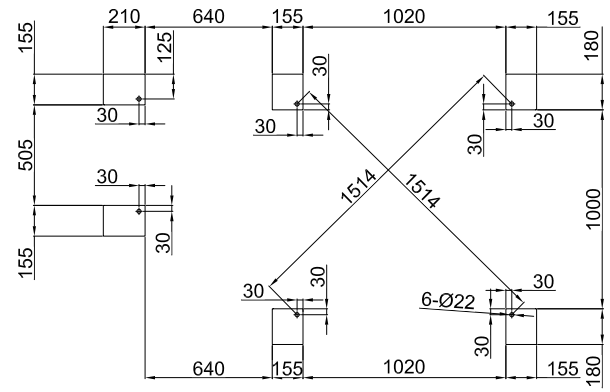

Rev.	Issue Data	Description	Originator	Checked	Approved
B	2025.Jul.23	Issued for Approval	K.H.JEON	K.C.KIM	J.H.LIM
A	2025.Jan.08	Issued for Approval	K.H.JEON	K.C.KIM	J.H.LIM

PURCHASER	HANWHA ENGINE
CLIENT	-
MODEL/TYPE ENGINE	DN100 GAS VALVE UNIT (ED-Type) / Right Hand 5X72DF-2.2 / WINGD
DRAWING NO.	W5XGVU-SN2709-GAR
General Arrangement Drawing for GAS VALVE UNIT	SUPERLOK® 17, Sinsojaesandan 2-ro, Jangan-eup Gijang-gun, Busan, 46031 South Korea TEL:+82-51-780-5083 / FAX:+82-51-780-5099

BMT Co., Ltd.

SUPERLOK®

DN100 Gas Valve Unit (X-DF for WinGD) Valve Drawing

(Doc No. : W5XGVU-SN2693-VD)

D	2024 Jul. 30	Issued for approval	K.H.JEON	K.C.KIM	J.H.LIM
A	2024 Nov. 11	Issued for approval	K.H.JEON	K.C.KIM	J.H.LIM
Rev.	Date	Description	Prepared	Reviewed	Approved

Revision History

Rev	Status	Date	Revision Memo	Remark
A	IFA	2024.12.10	First Issue	
D	IFA	2025.07.30	1) Added 'Hull No.' 2) Added details in the Drawing(p4, p6)	

Engine Type	WinGD 5X72DF-2.2	**Description**	DN100 GAS VALVE UNIT (ED-Type)	**Hull No.**	SN2693/2694/2695/2696 2697/2698/2699/2700 2701/2702/2703/2704 2705/2706/2707
Document No.	W5XGVU-SN2693-VD			BMT Co., Ltd.	

VALVE PRESSURE (CLASS)	Design Pressure(MPa)	Shell test Pressure(MPa)	Seat test Pressure(MPa)
150	1.6	2.4	1.76

NOTE

1. FULID : NATURAL GAS
2. DESIGN PRESSURE : 1.6 MPa
3. DESIGN TEMPERATURE : 0° C ~ 60° C
4. FACE TO FACE DIMENSIONS : MAKER STANDARD
5. END FLANGE DIMENSIONS : ASME B16.5
6. BLOW OUT PROOF STEM/API607 F.S DESIGN
   ANTI STATIC DEVICE
7. FLOW DIRECTION : BI-DIRECTION
8. TEST STD. : API 598

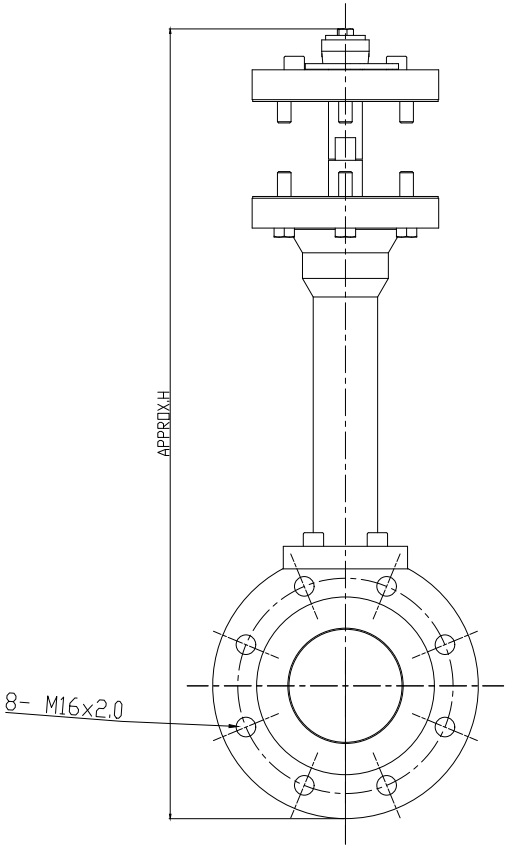

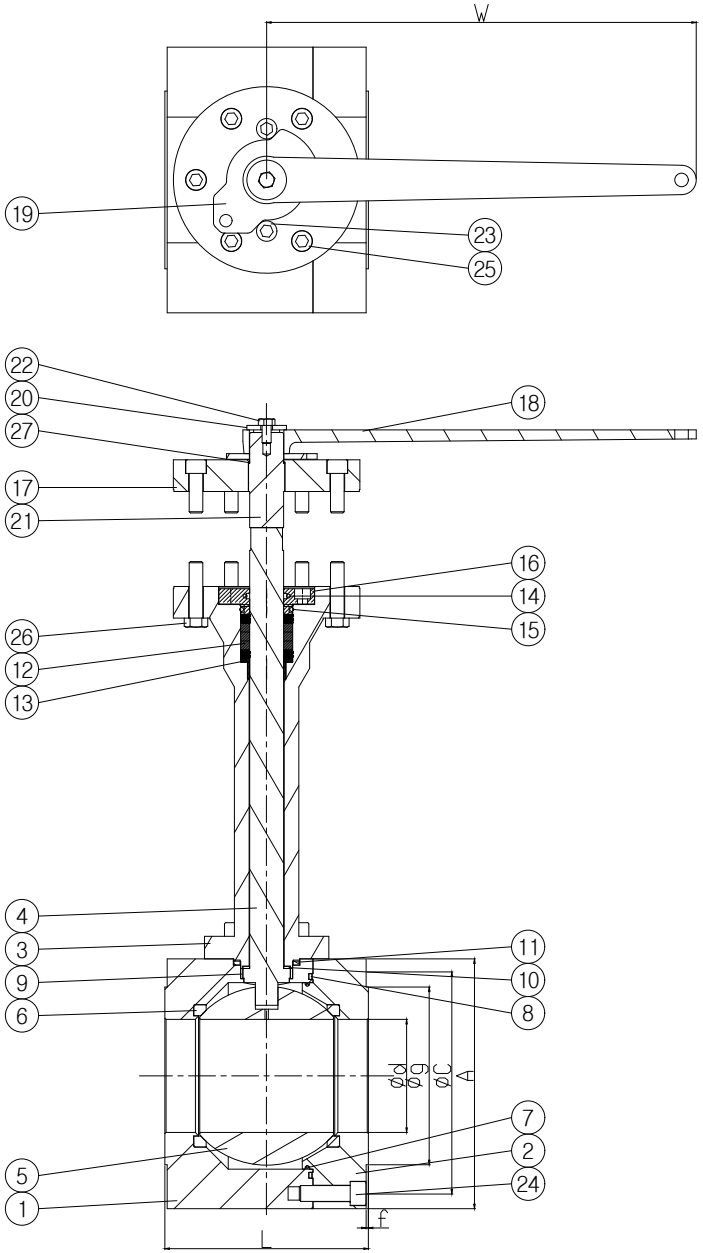

NO.	DESCRIPTION	MATERIAL	Q'TY	REMARK
1	BODY	A182-F316L	1	
2	BODY CAP	A182-F316L	1	
3	BONNET	A182-F316L	1	
4	STEM	A276-316	1	
5	BALL	SS316	1	
6	BALL SEAT	R.PTFE	2	GLASS 15%
7	O-RING	VITON	1	
8	GRAPHITE PACKING	Graphite	1	
9	STEM BEARING	TFM1600	1	
10	THRUST WASHER	PEEK	1	
11	SPIRAL WOUND GASKET	SS316+GRAPHITE	1	
12	GRAPHITE PACKING	GRAPHITE	1SET	
13	PACKING SEAT	SS316	1	
14	O-RING	MS-NBR	1	
15	O-RING	MS-NBR	1	
16	PACKING GLAND	SS316	1	
17	TOP FLANGE	A182-F316	1	
18	BAR HANDLE	SS316	1	
19	LOCKING PLATE	A240-316	1	
20	PLAIN WASHER	SS316	1	
21	ADAPTOR	A276-316	1	
22	HEX BOLT	SS316	1	
23	WRENCH BOLT	SS316	2	
24	WRENCH BOLT	SS316	7	
25	WRENCH BOLT	SS316	10	
26	HEX BOLT	SS316	6	
27	THRUST WASHER	PTFE	1	
28	WRENCH BOLT	SS316	4	
29	UPPER STEM BEARING(D-BUSH)	SS316+R.PTFE	1	

Rev.	Issue Data	Description	Originator	Checked	Approved
D	2025.Jul.30	Issued for Approval	K.H.JEON	K.C.KIM	J.H.LIM
A	2024.Nov.11	Issued for Approval	K.H.JEON	K.C.KIM	J.H.LIM

PURCHASER	HANWHA ENGINE
CLIENT	
PROJECT NAME HULL NO.	DN100 GAS VALVE UNIT(ED-TYPE) -
MFR. MODEL/TYPE ITEM NAME	FB SERIES BALL VALVE(EXTENSION BONNET) -
TAG NO.	V01
DRAWING NO.	W5XGVU-SN2693-VD-01
GENERAL ARRANGEMENT DRAWING for VALVE	BMT Co., Ltd.

FB2F29 - R64A - A111 - 36L - EXT - GVU - DNV

(UNIT : mm)

NO.	DESCRIPTION	FLANGE RF DIMENSION(CLASS 150)				Φd (Full Bore)	L±2.0	H Approx.	W	REMARK
		Φg	ØC	A	f					
1	4" #150 RF	157.2	190.5	221	2	100	180	699	380	-

VALVE PRESSURE (CLASS)	Design Pressure(MPa)	Shell test Pressure(MPa)	Seat test Pressure(MPa)
150	1.6	2.4	1.76

NOTE

1. FULID : NATURAL GAS
2. DESIGN PRESSURE : 1.6 MPa
3. DESIGN TEMPERATURE : 0° C ~ 60° C
4. FACE TO FACE DIMENSIONS : MAKER STANDARD
5. END FLANGE DIMENSIONS : ASME B16.5
6. BLOW OUT PROOF STEM/API607 F.S DESIGN
   ANTI STATIC DEVICE
7. FLOW DIRECTION : BI-DIRECTION
8. TEST STD. : API 598

DB219 - R64A - P111 - 36L - GVU - DNV

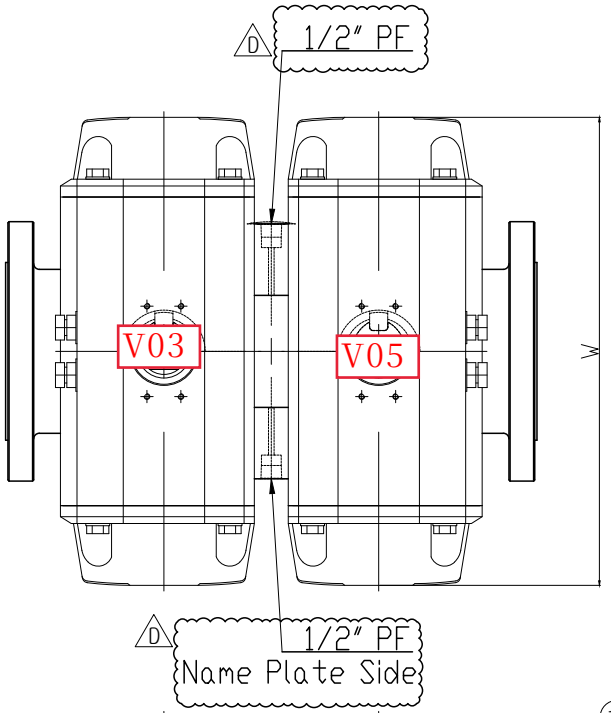

NO.	DESCRIPTION	MATERIAL	Q'TY	REMARK
1	BODY	A182-F316L	1	
2	BODY CAP	A182-F316L	2	
3	THRUST WASHER	PEEK	2	
4	STEM	A276-316	2	
5	BONNET	A182-F316L	2	
6	BRACKET	A240-316	2	
7	ADAPTOR	A276-316	2	
8	BALL	SS316	2	
9	BALL SEAT	R.PTFE	4	GLASS 15%
10	O-RING	VITON	2	
11	O-RING	VITON	2	
12	GRAPHITE PACKING	GRAPHITE	2	
13	NAME PLATE	SS316	1	
14	PNEUMATIC ACTUATOR	-	2	
15	GRAPHITE PACKING	GRAPHITE	2	
16	WRENCH BOLT	SS316	8	
17	WRENCH BOLT	SS316	8	
18	HEX BOLT	SS316	8	
19	HEX NUT	SS316	12	
20	STUD BOLT	A193-B8M	12	
21	ANTISTATIC SPRING	SS304	4	
22	ANTISTATIC BALL	SS304	4	

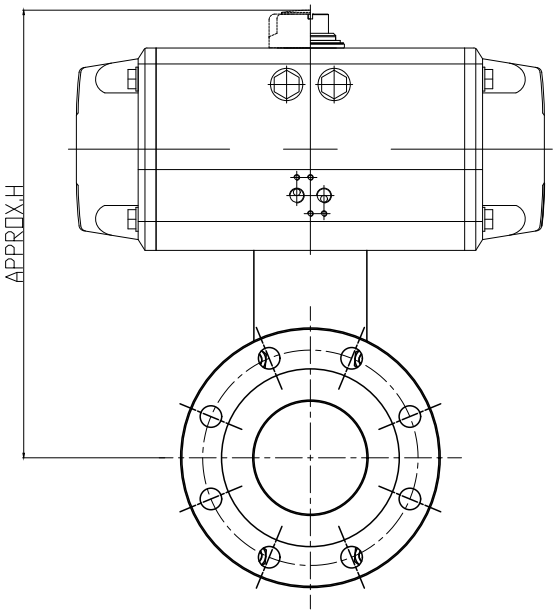

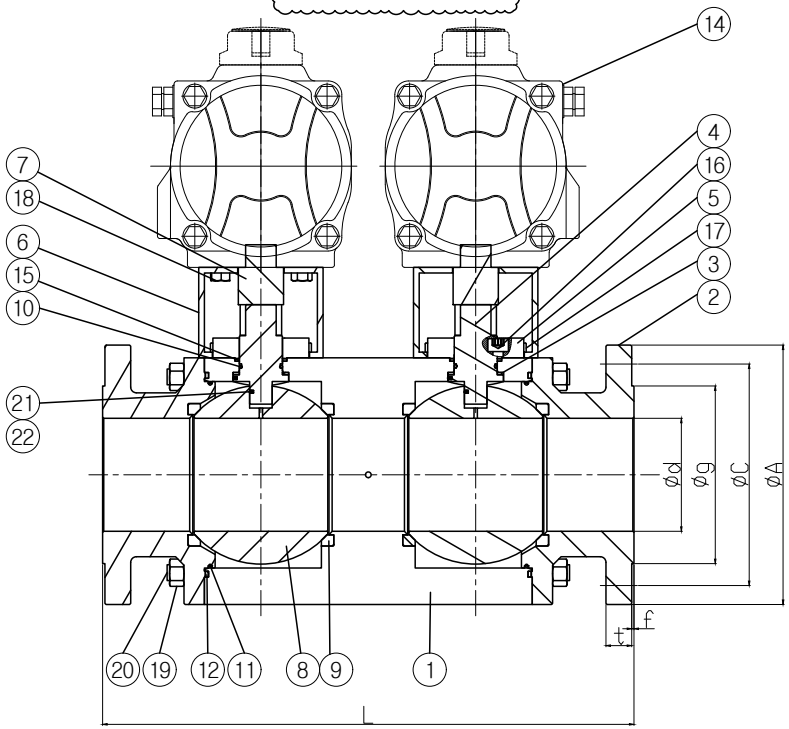

(UNIT : mm)

NO.	DESCRIPTION	FLANGE RF DIMENSION(CLASS 150)					n-øh	ød (Full Bore)	L±2.0	H Approx.	W	REMARK
		øg	øC	øA	t	f						
2	4" #150 RF	157.2	190.5	229.5	22.5	2	8-ø19.1	100	470	396	414	-

Rev.	Issue Data	Description	Originator	Checked	Approved
D	2025.Jul.30	Issued for Approval	K.H.JEON	K.C.KIM	J.H.LIM
A	2024.Nov.11	Issued for Approval	K.H.JEON	K.C.KIM	J.H.LIM

PURCHASER	HANWHA ENGINE
CLIENT	
PROJECT NAME HULL NO.	DN100 GAS VALVE UNIT(ED-TYPE) -
MFR. MODEL/TYPE ITEM NAME	DB SERIES DOUBLE BLOCK & BLEED VALVE(REMOTE) Fail to Close
TAG NO.	V03/V05
DRAWING NO.	W5XGVU-SN2693-VD-02
GENERAL ARRANGEMENT DRAWING for VALVE	BMT Co., Ltd.

VALVE PRESSURE (CLASS)	Design Pressure(MPa)	Shell test Pressure(MPa)	Seat test Pressure(MPa)
150	1.6	2.4	1.76

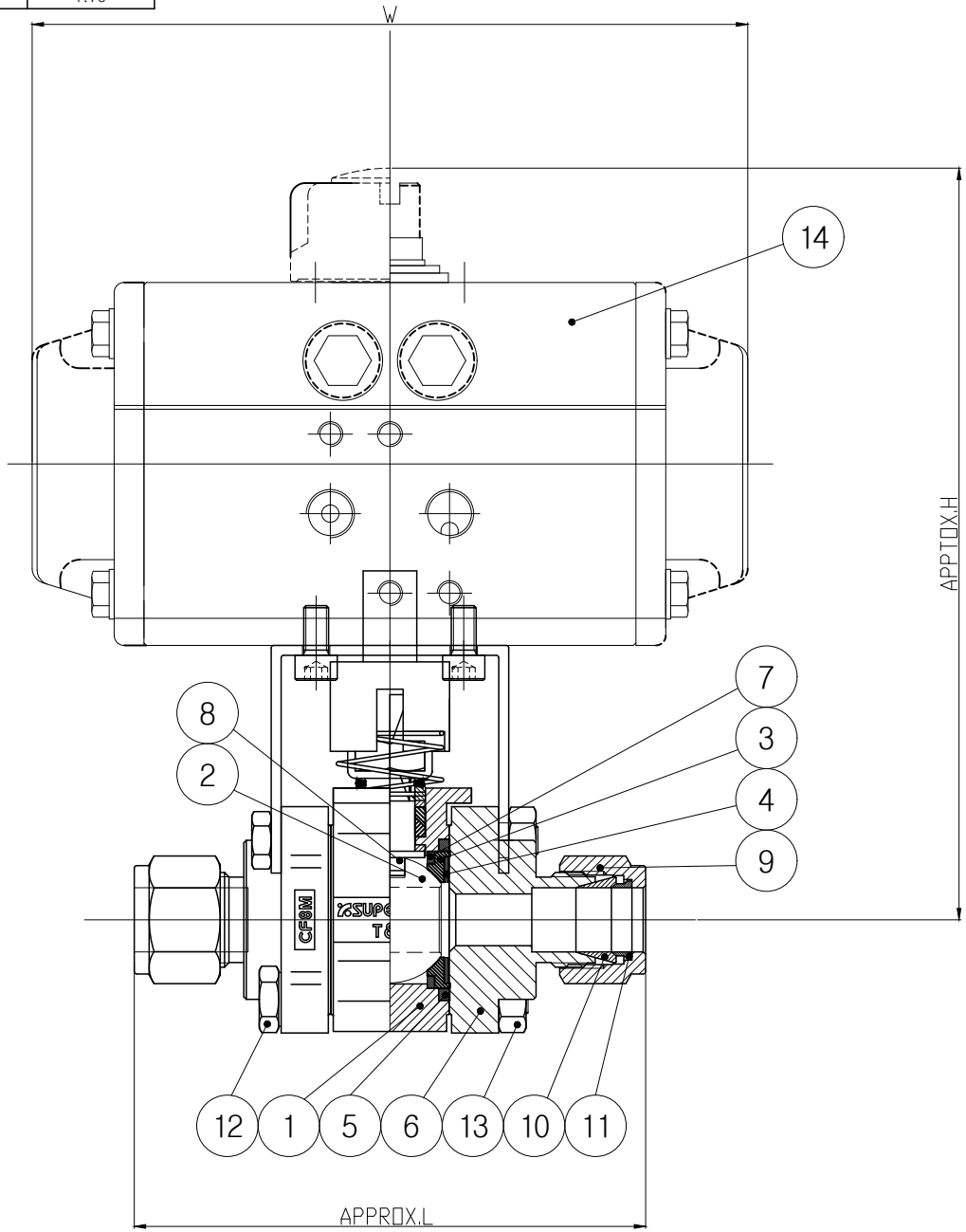

NO.	DESCRIPTION	MATERIAL	Q'TY	REMARK
1	BODY	A351-CF3M	1	
2	BALL	SS316	1	
3	BALL SEAT	PTFE	2	
4	DISC SPRING	SS304	2	
5	FLANGE SEAL	PTFE	2	
6	FLANGE	A351-CF3M	2	
7	SUPPORT RING	SS316	2	
8	STEM	SS316	1	
9	NUT	A276-316/316L	2	
10	FRONT FERRULE	A193-B8M CL2	2	
11	BACK FERRULE	A479-316/316L	2	
12	FLANGE BOLT	SS316L	4	
13	HEX NUT	SS316(A4-70)	4	
14	PNEUMATIC ACTUATOR	-	1	

NOTE

1. FULID : N_2
2. DESIGN PRESSURE : 1.6 MPa
3. DESIGN TEMPERATURE : 0° C ~ 60° C
4. FACE TO FACE DIMENSIONS : MAKER STANDARD
5. END CONNECTION : 12mm TUBE COMPRESSION
6. TEST STD. : API 598

SWB3202 - S12M - P1 - 36L - HKC - DNV

(UNIT : mm)

NO.	DESCRIPTION	H Approx.	L Approx.	W	REMARK
3	12mm Tube Compression	152	103	144	-

Rev.	Issue Data	Description	Originator	Checked	Approved
D	2025.Jul.30	Issued for Approval	K.H.JEON	K.C.KIM	J.H.LIM
A	2024.Nov.11	Issued for Approval	K.H.JEON	K.C.KIM	J.H.LIM

PURCHASER	HANWHA ENGINE
CLIENT	
PROJECT NAME HULL NO.	DN100 Gas Valve Unit(ED Type) -
MFR. MODEL/TYPE ITEM NAME	SWB SERIES SWING OUT BALL VALVE(Remote) Fail to Open
TAG NO.	V04/V15
DRAWING NO.	W5XGVU-SN2693-VD-03
GENERAL ARRANGEMENT DRAWING for VALVE	BMT Co., Ltd.

VALVE PRESSURE (CLASS)	Design Pressure(MPa)	Shell test Pressure(MPa)	Seat test Pressure(MPa)
150	1.6	2.4	1.76

NO	DESCRIPTION	MATERIAL	Q'TY	REMARK
1	BODY	A182-F316L	1	
2	END CONNECTOR	SS316L	1	
3	BALL	SS316	1	
4	CONNECTOR SEAL	PTFE	1	
5	PACKING	PTFE	1	
6	PACKING GLAND	A240-304	1	
7	STEM WASHER	A240-304	1	
8	STEM	A276-316	1	
9	BALL SEAL	VITON	2	
10	BACK-UP-RING	SS316	1	
11	THRUST WASHER	SS316	1	
12	BAR HANDLE	SS316	1	
13	O-RING	SS316	1	
14	FLANGE NUT	SS316	1	
15	NUT	SS316L	2	
16	FRONT FERRULE	SS316	2	
17	BACK FERRULE	SS316	2	

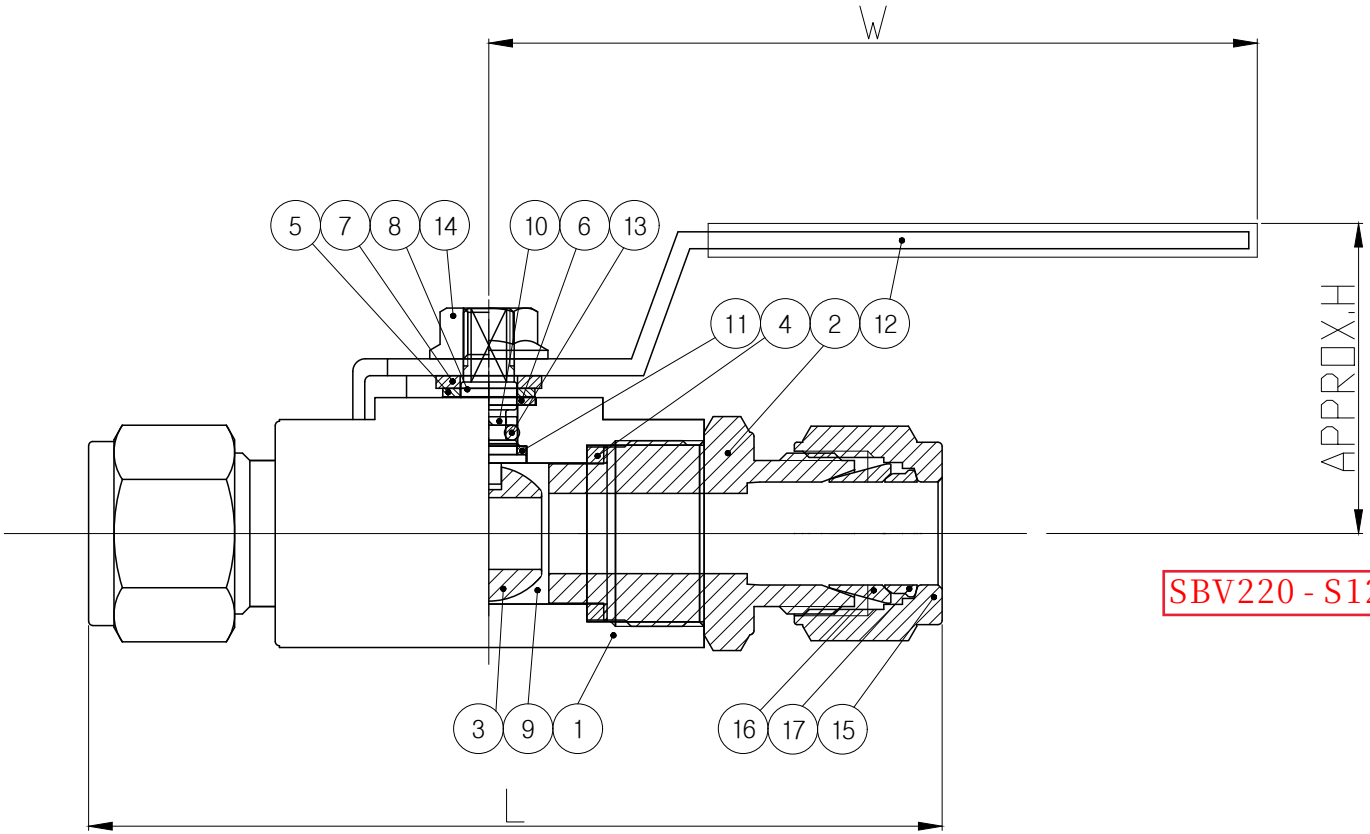

NOTE

1. FULID : N_2
2. DESIGN PRESSURE : 1.6 MPa
3. DESIGN TEMPERATURE : 0° C ~ 60° C
4. FACE TO FACE DIMENSIONS : MAKER STANDARD
5. END CONNECTION : 3/4" TUBE COMPRESSION
6. TEST STD. : API 598

SBV220 - S12 - CE - 36L - DNV

(UNIT : mm)

NO.	DESCRIPTION	H Approx.	L Approx.	W	REMARK
4	3/4" Tube Compression	44	107	100	-

Rev.	Issue Data	Description	Originator	Checked	Approved
D	2025.Jul.30	Issued for Approval	K.H.JEON	K.C.KIM	J.H.LIM
A	2024.Nov.11	Issued for Approval	K.H.JEON	K.C.KIM	J.H.LIM

PURCHASER	HANWHA ENGINE
CLIENT	
PROJECT NAME HULL NO.	DN100 GAS VALVE UNIT(ED-TYPE) -
MFR. MODEL/TYPE ITEM NAME	SBV220 SERIES BALL VALVE(MANUAL) -
TAG NO.	V08
DRAWING NO.	W5XGVU-SN2693-VD-04
GENERAL ARRANGEMENT DRAWING for VALVE	BMT Co., Ltd.

VALVE PRESSURE (CLASS)	Design Pressure(MPa)	Shell test Pressure(MPa)	Seat test Pressure(MPa)
150	1.6	2.4	1.76

NO.	DESCRIPTION	MATERIAL	Q'TY	REMARK
1	BODY	A182-F316L	1	
2	BODY CAP	A182-F316L	2	
3	STEM	A276-316	2	
4	THRUST WASHER	PEEK	2	
5	GRAPHITE PACKING	GRAPHITE	2	
6	GRAPHITE PACKING	GRAPHITE	2	
7	O-RING	VITON	2	
8	O-RING	VITON	2	
9	TEFLON SEAL	PTFE	2	
10	BALL SEAT CAPSULE	A276-316	2	
11	BALL SEAT	R.PTFE	4	GLASS 15%
12	BALL	A182 F316	2	
13	PACKING GLAND	A276-316	2	
14	BRACKET	A240-316	2	
15	PNEUMATIC ACTUATOR	-	2	
16	ADAPTOR	A276-316	2	
17	HEX BOLT	SS316	8	
18	WRENCH BOLT	SS316	8	
19	HEX NUT	SS316	8	
20	STUD BOLT	A193-B8M	8	
21	BONNET	SS316	2	

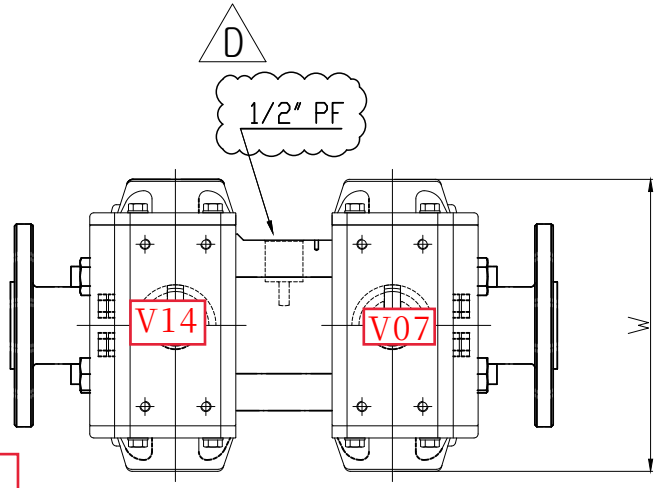

DB212 - R12A - P111 - 36L - GVU - DNV

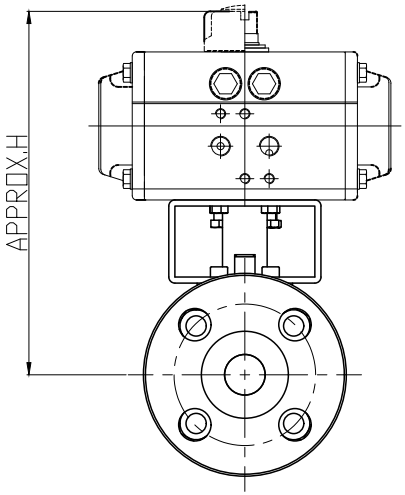

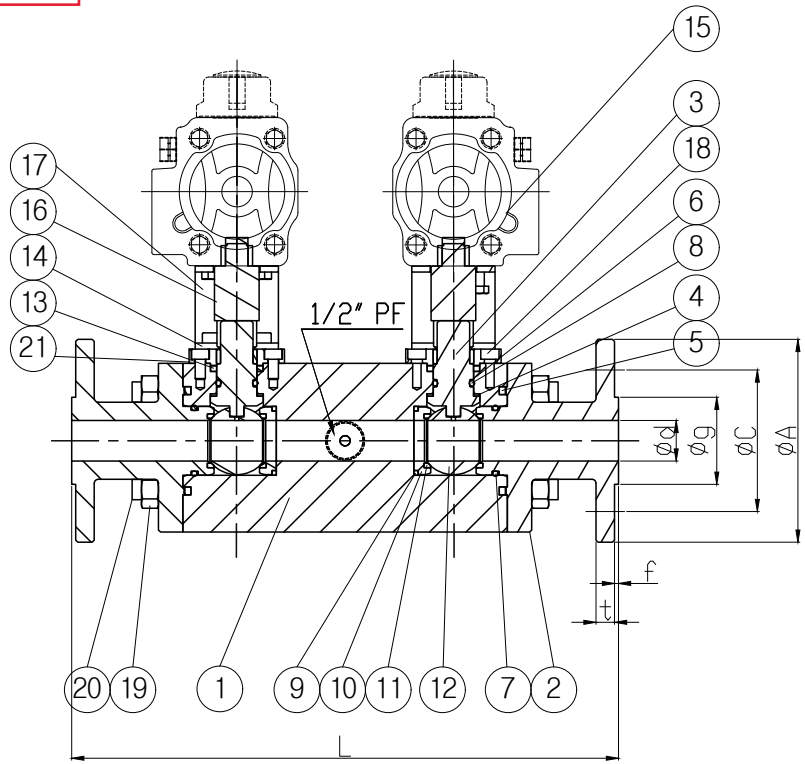

NOTE

1. FULID : N_2
2. DESIGN PRESSURE : 1.6 MPa
3. DESIGN TEMPERATURE : 0° C ~ 60° C
4. FACE TO FACE DIMENSIONS : MAKER STANDARD
5. END FLANGE DIMENSIONS : ASME B16.5
6. BLOW OUT PROOF STEM/API607 F.S DESIGN
7. FLOW DIRECTION : BI-DIRECTION
8. TEST STD. : API 598

(UNIT : mm)

NO.	DESCRIPTION	FLANGE RF DIMENSION(CLASS 150)						Ød (Full Bore)	L±2.0	H Approx.	W	REMARK
		Øg	ØC	ØA	t	f	n-Øh					
5	3/4" #150 RF	42.9	69.8	100	9.1	2	4-Ø16	20	267	180	144	-

Rev.	Issue Data	Description	Originator	Checked	Approved
D	2025.Jul.30	Issued for Approval	K.H.JEON	K.C.KIM	J.H.LIM
A	2024.Nov.11	Issued for Approval	K.H.JEON	K.C.KIM	J.H.LIM

PURCHASER	HANWHA ENGINE
CLIENT	
PROJECT NAME HULL NO.	DN100 GAS VALVE UNIT(ED-TYPE) -
MFR. MODEL/TYPE ITEM NAME	DB SERIES DOUBLE BLOCK & BLEED VALVE(REMOTE) Fail to Close
TAG NO.	V07/V14
DRAWING NO.	W5XGVU-SN2693-VD-05
GENERAL ARRANGEMENT DRAWING for VALVE	BMT Co., Ltd.

VALVE PRESSURE (CLASS)	Design Pressure(MPa)	Shell test Pressure(MPa)	Seat test Pressure(MPa)
150	1.6	2.4	1.76

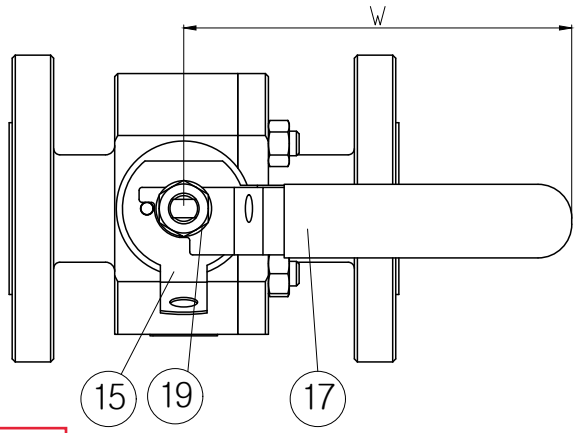

FB2F22 - R12A - A101 - 36L - DNV

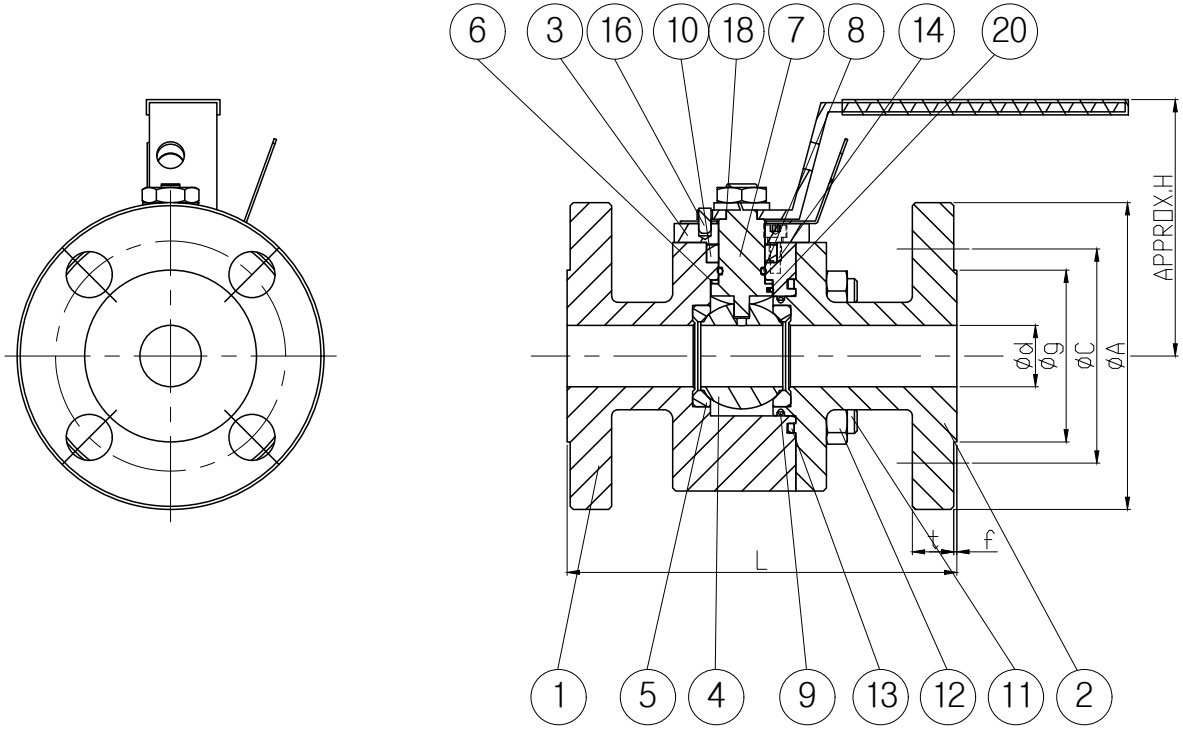

(UNIT : mm)

NO.	DESCRIPTION	FLANGE RF DIMENSION(CLASS 150)						Ød (Full Bore)	L±2.0	H Approx.	W	REMARK
		Øg	ØC	ØA	t	f	n-Øh					
6	3/4" #150 RF	42.9	69.8	99	9.4	1.5	4-Ø16	19	117	84	127	-

NO.	DESCRIPTION	MATERIAL	Q'TY	REMARK
1	BODY	A182-F316L	1	
2	BODY CAP	A182-F316L	1	
3	BONNET	A182-F316L	1	
4	BALL	A351 CF8M	1	
5	BALL SEAT	PTFE	2	
6	THRUST WASHER	PEEK	1	
7	STEM	SS316	1	
8	O-RING	VITON	1	
9	O-RING	VITON	1	
10	GASKET	GRAPHITE	1	
11	STUD BOLT	SS316	4	(A4-70)
12	HEX NUT	SS316	4	(A4-70)
13	GRAPHITE PACKING	GRAPHITE	2	
14	WRENCH BOLT	SS316	4	(A4-70)
15	LOCKING DEVICE	SS316	1	
16	STOP PIN	SS316	1	
17	HANDLE	A240 316	1	
18	SPRING WASHER	SS316	1	
19	HEX NUT	SS316	1	(A4-70)
20	ANTI STATIC DEVICE	-	1	

NOTE

1. FULID : N_2
2. DESIGN PRESSURE : 1.6 MPa
3. DESIGN TEMPERATURE : 0° C ~ 60° C
4. FACE TO FACE DIMENSIONS : ASME B16.10
5. END FLANGE DIMENSIONS : ASME B16.5
6. BLOW OUT PROOF STEM/API607 F.S DESIGN
   ANTI STATIC DEVICE
7. FLOW DIRECTION : BI-DIRECTION
8. TEST STD. : API 598

Rev.	Issue Data	Description	Originator	Checked	Approved
D	2025.Jul.30	Issued for Approval	K.H.JEON	K.C.KIM	J.H.LIM
A	2024.Nov.11	Issued for Approval	K.H.JEON	K.C.KIM	J.H.LIM

PURCHASER	HANWHA ENGINE
CLIENT	
PROJECT NAME HULL NO.	DN100 Gas Valve Unit(ED Type) -
MFR. MODEL/TYPE ITEM NAME	FB SERIES BALL VALVE(Manual) -
TAG NO.	V11-2
DRAWING NO.	W5XGVU-SN2693-VD-06
GENERAL ARRANGEMENT DRAWING for VALVE	BMT Co., Ltd.

VALVE PRESSURE (CLASS)	Design Pressure(MPa)	Shell test Pressure(MPa)	Seat test Pressure(MPa)
150	1.6	2.4	1.76

NO	DESCRIPTION	MATERIAL	Q'TY	REMARK
1	CARTRIDGE	A276-316L	1	
2	POPPET	A276-316	1	
3	CARTRIDGE POPPET GUIDE	SS316	1	
4	SEAL	VITON	1	
5	SUPPORT RING	SS316	1	
6	SPRING 0.2bar	SS304	1	
7	POPPET GUIDE STOPPER	SS316	1	
8	SNAP RING	Stainless Steel	1	

FPCAWRF - 12 - 36L - SKID - DNV

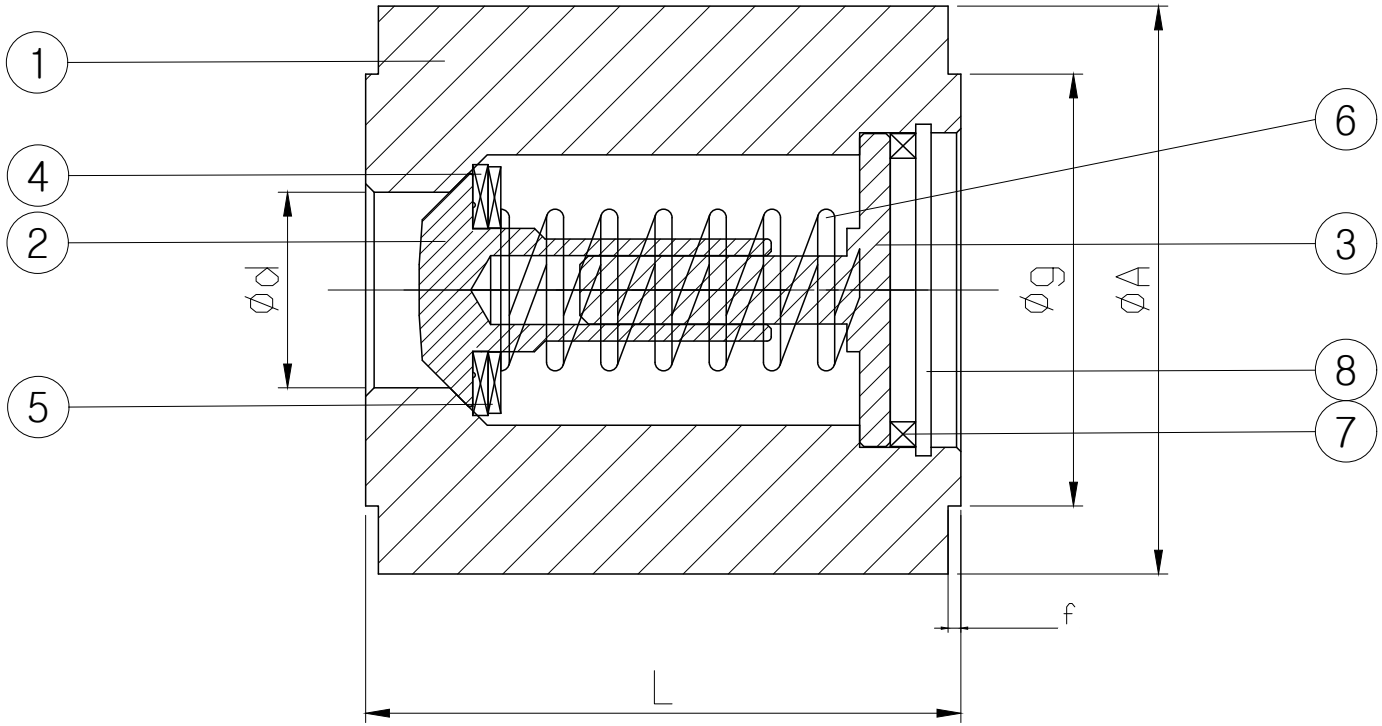

FLOW DIRECTION

NOTE

1. FLUID : NATURAL GAS / N_2
2. DESIGN PRESSURE : 1.6 MPa
3. DESIGN TEMPERATURE : 0° C ~ 60° C
4. FACE TO FACE DIMENSIONS : ASME B 16.10
5. END FLANGE DIMENSIONS : ASME B 16.5
6. TEST STD. : API 598

(UNIT : mm)

NO.	DESCRIPTION	FLANGE RF DIMENSION(CLASS 150)			ϕd	L±2.0	REMARK
		ϕg	ϕA	f			
7	3/4" #150 RF	42.9	57.2	1.5	18	50.5	-

Rev.	Issue Data	Description	Originator	Checked	Approved
D	2025.Jul.30	Issued for Approval	K.H.JEON	K.C.KIM	J.H.LIM
A	2024.Nov.11	Issued for Approval	K.H.JEON	K.C.KIM	J.H.LIM

PURCHASER	HANWHA ENGINE
CLIENT	
PROJECT NAME HULL NO.	DN100 Gas Valve Unit(ED Type) -
MFR. MODEL/TYPE ITEM NAME	FPC SERIES PAN CHECK VALVE -
TAG NO.	V11-1
DRAWING NO.	W5XGVU-SN2693-VD-07
GENERAL ARRANGEMENT DRAWING for VALVE	BMT Co., Ltd.

VALVE PRESSURE (CLASS)	Design Pressure(MPa)	Shell test Pressure(MPa)	Seat test Pressure(MPa)
150	1.6	2.4	1.76

FB2F23 - R16A - P010 - 36L - DNV

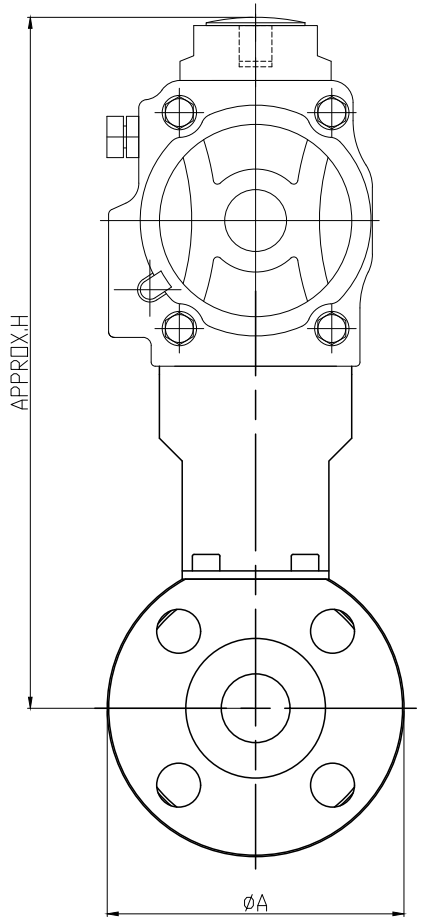

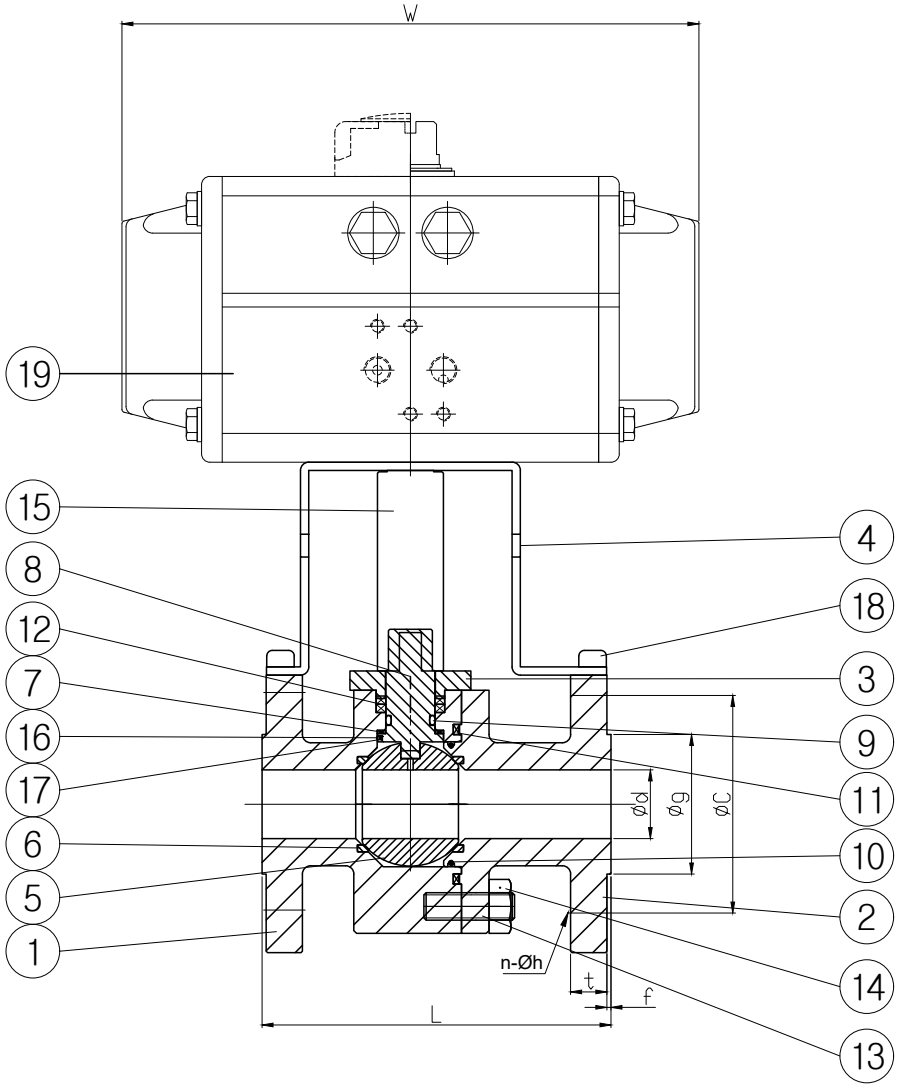

NO.	DESCRIPTION	MATERIAL	Q'TY	REMARK
1	BODY	A182-F316L	1	
2	BODY CAP	A182-F316L	1	
3	BONNET	A182-F316L	1	
4	BRACKET	SS316	1	
5	BALL	A182-F316	1	
6	BALL SEAT	R.PTFE	2	GLASS 15%
7	THRUST WASHER	PEEK	1	
8	STEM	SS316	1	
9	O-RING	NBR	1	
10	O-RING	NBR	1	
11	GRAPHITE PACKING	GRAPHITE	1	
12	GRAPHITE PACKING	GRAPHITE	2	
13	STUD BOLT	SS316	4	(A4-70)
14	HEX NUT	SS316	4	(A4-70)
15	ADAPTOR	A276-F316	1	
16	ANTI STATIC SPRING	-	1	
17	ANTI STATIC BALL	-	1	
18	WRENCH BOLT	SS316	4	(A4-70)
19	ACTUATOR	-	1	HP-075S

NOTE

1. FULID : N_2
2. DESIGN PRESSURE : 1.6 MPa
3. DESIGN TEMPERATURE : 0° C ~ 60° C
4. FACE TO FACE DIMENSIONS : ASME B16.10
5. END FLANGE DIMENSIONS : ASME B16.5
6. BLOW OUT PROOF STEM/API607 F.S DESIGN
   ANTI STATIC DEVICE
7. FLOW DIRECTION : BI-DIRECTION
8. TEST STD. : API 598

(UNIT : mm)

NO.	DESCRIPTION	FLANGE RF DIMENSION(CLASS 150)						Ød (Full Bore)	L±2.0	H Approx.	W	REMARK
		Øg	ØC	ØA	t	f	n-Øh					
8	1" #150 RF	50.8	79.2	108	13.2	1.5	4-Ø16	25	127	253	210	-

Rev.	Issue Data	Description	Originator	Checked	Approved
D	2025.Jul.30	Issued for Approval	K.H.JEON	K.C.KIM	J.H.LIM
A	2024.Nov.11	Issued for Approval	K.H.JEON	K.C.KIM	J.H.LIM

PURCHASER	HANWHA ENGINE
CLIENT	
PROJECT NAME HULL NO.	DN100 Gas Valve Unit(ED Type) -
MFR. MODEL/TYPE ITEM NAME	FB SERIES BALL VALVE(Remote) Fail to Close
TAG NO.	V02
DRAWING NO.	W5XGVU-SN2693-VD-08
GENERAL ARRANGEMENT DRAWING for VALVE	BMT Co., Ltd.

BMT Co., Ltd.

SUPERLOK®

DN100 Gas Valve Unit (X-DF for WinGD) Instrumentation Drawing

(Doc No. : W5XGVU-SN2709-ITDRA)

A	2024 Jan. 08	Issued for approval	K.H.JEON	K.C.KIM	J.H.LIM
Rev.	Date	Description	Prepared	Reviewed	Approved

Revision History

Rev	Status	Date	Revision Memo	Remark
A	IFA	2025.01.08	First Issue	

Engine Type	WinGD 5X72DF-2.2	**Description**	DN100 GAS VALVE UNIT (ED-Type)	**Hull No.**	SN2709/2710
Document No.	W5XGVU-SN2709-ITDRA			BMT Co., Ltd.	

Tag No. TT01	
Subject	Description
Maker	Danfoss
Model	MBT 5252-1021-0100-0200-L425 MBT 9110-084Z7411
Transmitter setting range	-50 to 100° C
Output signal	4 - 20 mA
Electrical connection	Type B/Pg 16
Process connection	ISO 228, G1/2A
Sensor element	1 x PT 100, EN 60751 Class B
Max. Ambient temp	85 °C
Ex Protection	Ex ia IIC T5..T4 Ga/Gb
IECEx Cert No.	IECEx DEK 20.0062X

POS	DESCRIPTION
1	Protection tube:W.no. 1.4571(AISI 316 Ti)
2	Process connection: W.no. 1.4404(AISI 316 L)
3	Union nut:Nickel plated brass
4	Connection head:Die cast aluminium

Unit : mm

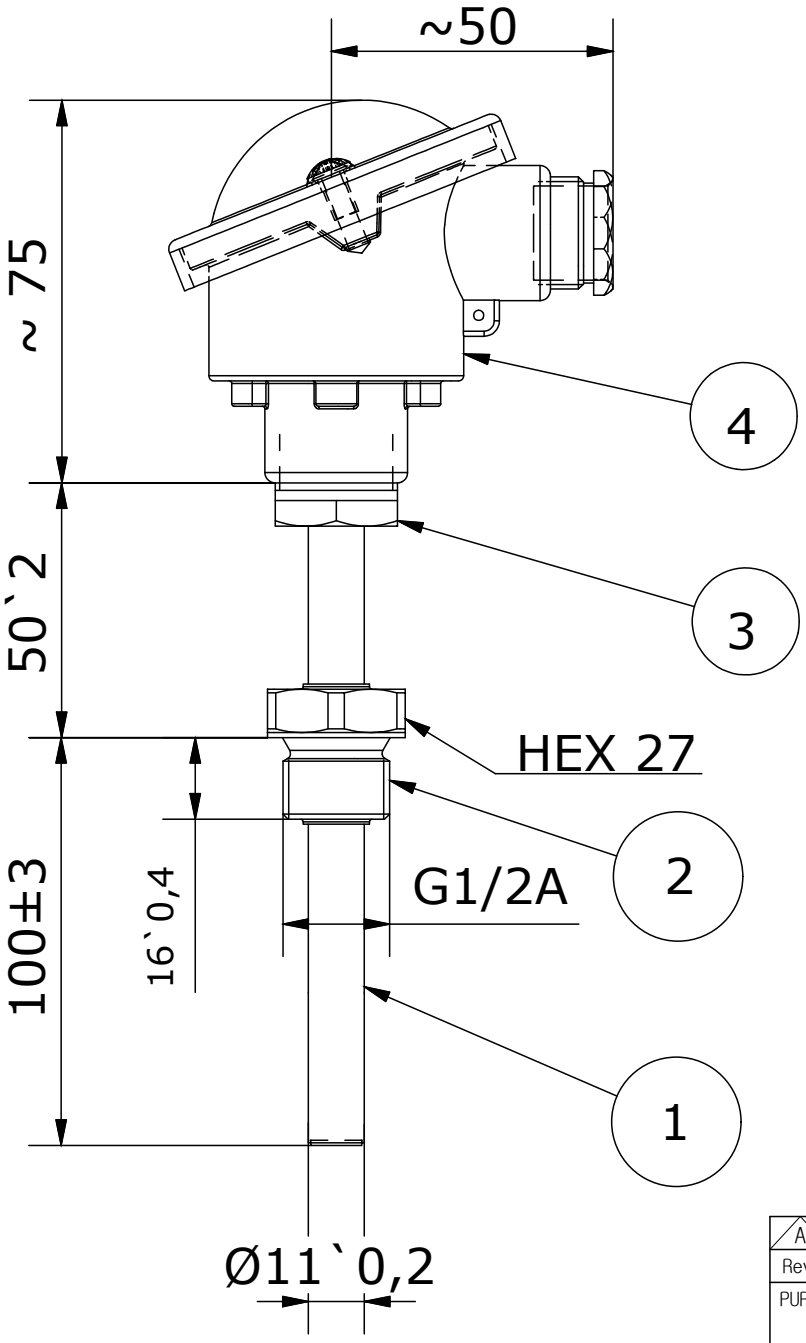

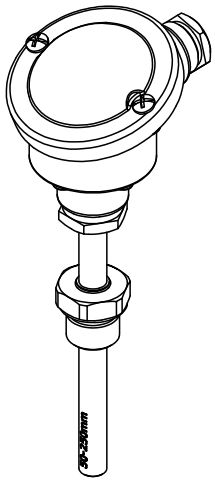

Electrical connection

Standard EEx ia IIC T4/T6

Output 4-20mA

Supply 8-28 VDC

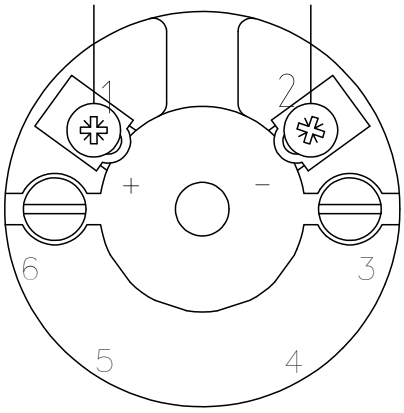

Rev.	Issue Data	Description	Originator	Checked	Approved
A	2025.Jan.08	Issued for Approval	K.H.JEON	K.C.KIM	J.H.LIM

PURCHASER	HANWHA ENGINE
CLIENT	-
MODEL/TYPE ENGINE	DN100 GAS VALVE UNIT (ED-Type) 5X72DF-2.2 / WINGD
DRAWING NO.	W5XGVU-SN2709-ITDRA-01
Instrumentation for GAS VALVE UNIT	SUPERLOK® 17, Sinsojaesandan 2-ro, Jangan-eup Gijang-gun, Busan, 46031 South Korea TEL:+82-51-780-5083 / FAX:+82-51-780-5099

Tag No 1. PT05 2. PT06	
Subject	Description
Maker	Danfoss
Model	1. MBS 3300-2211-A6AB08-0 / 060G1472 2. MBS 3300-2011-A6AB08-0 / 060G1471
Pressure range	1. 0 - 1.6MPa (0 - 16bar) 2. 0 - 1.0MPa (0 - 10bar)
Supply voltage	9 - 32VDC
Output signal	4 - 20 mA
Electrical connection	EN 175301-803-A, Pg11
Pressure connection	EN 837 G1/2A, Hex 27mm
Protection class	IP65
Ex Protection	N/A
IECEx Cert No.	-

POS	DESCRIPTION
1	Process connection: EN 10088-1; 1.4404 (AISI 316 L)
2	Enclosure: EN 10088-1; 1.4404 (AISI 316 L)
3	Union nut:Nickel plated brass
4	Electrical connection: Glass filled polyamid, PA 6.6

Unit : mm

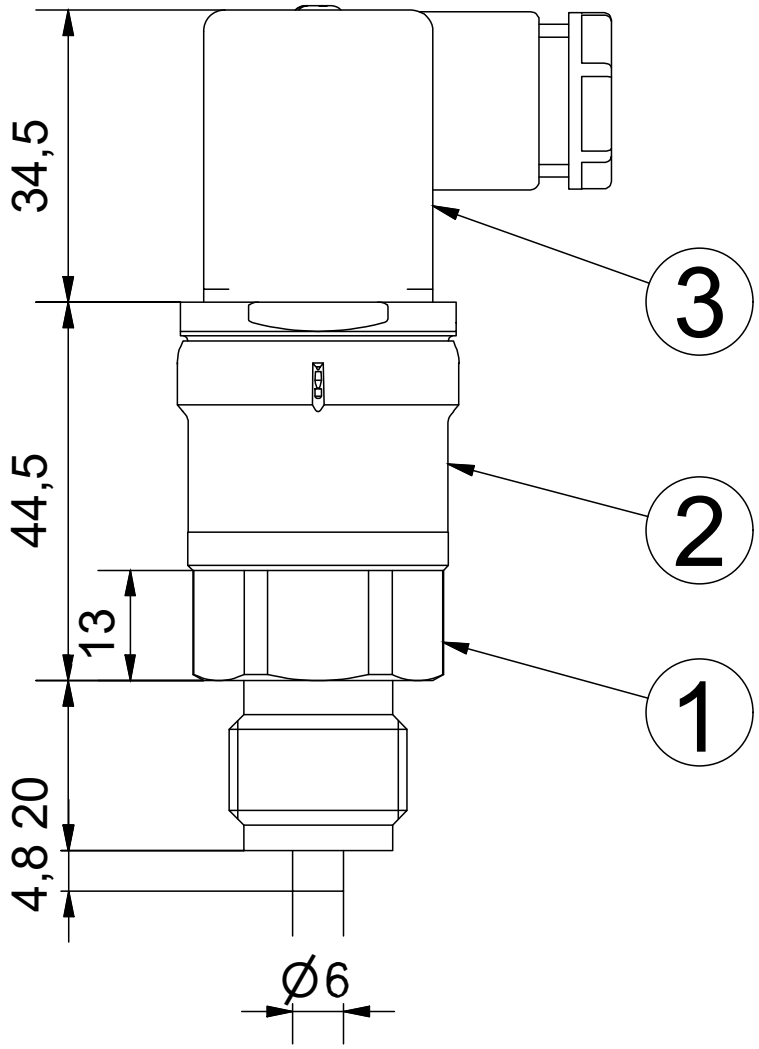

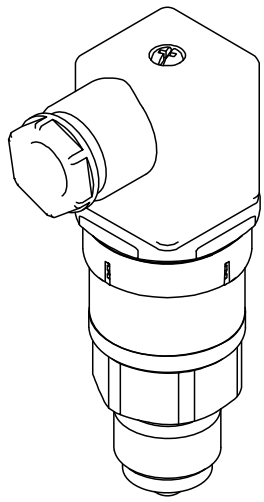

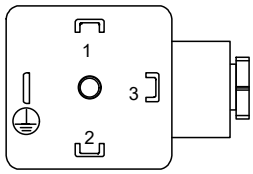

Electrical connection

Pins	Function
1	+Supply
2	-Supply
3	Not used
Earth	Connec to enclosure

Rev.	Issue Data	Description	Originator	Checked	Approved
A	2025.Jan.08	Issued for Approval	K.H.JEON	K.C.KIM	J.H.LIM

PURCHASER	HANWHA ENGINE
CLIENT	-
MODEL/TYPE ENGINE	DN100 GAS VALVE UNIT (ED-Type) X-DF / WINGD
DRAWING NO.	W5XGVU-SN2709-ITDRA-02
Instrumentation for GAS VALVE UNIT	SUPERLOK® 17, Sinsojaesandan 2-ro, Jangan-eup Gijang-gun, Busan, 46031 South Korea TEL:+82-51-780-5083 / FAX:+82-51-780-5099

Tag No. PT01 / PT03 / PT04	
Subject	Description
Maker	Danfoss
Model	MBS 4201-2411-A1AB08-0 / 060G4308
Pressure range	0 - 2.5MPa(0 - 25bar)
Supply voltage	10 - 28VDC
Output signal	4 - 20 mA
Electrical connection	EN 175301-803-A, Pg11
Pressure connection	EN837 G1/2
Protection class	IP65
Ex Protection	Ex ia IIC T5..T4 Ga/Gb
IECEx Cert No.	IECEx ULD 12.0005X

POS	DESCRIPTION
1	Process connection: EN 10088-1; 1.4404 (AISI 316 L)
2	Enclosure: EN 10088-1; 1.4404 (AISI 316 L)
3	Union nut:Nickel plated brass
4	Electrical connection: Glass filled polyamid, PA 6.6

Unit : mm

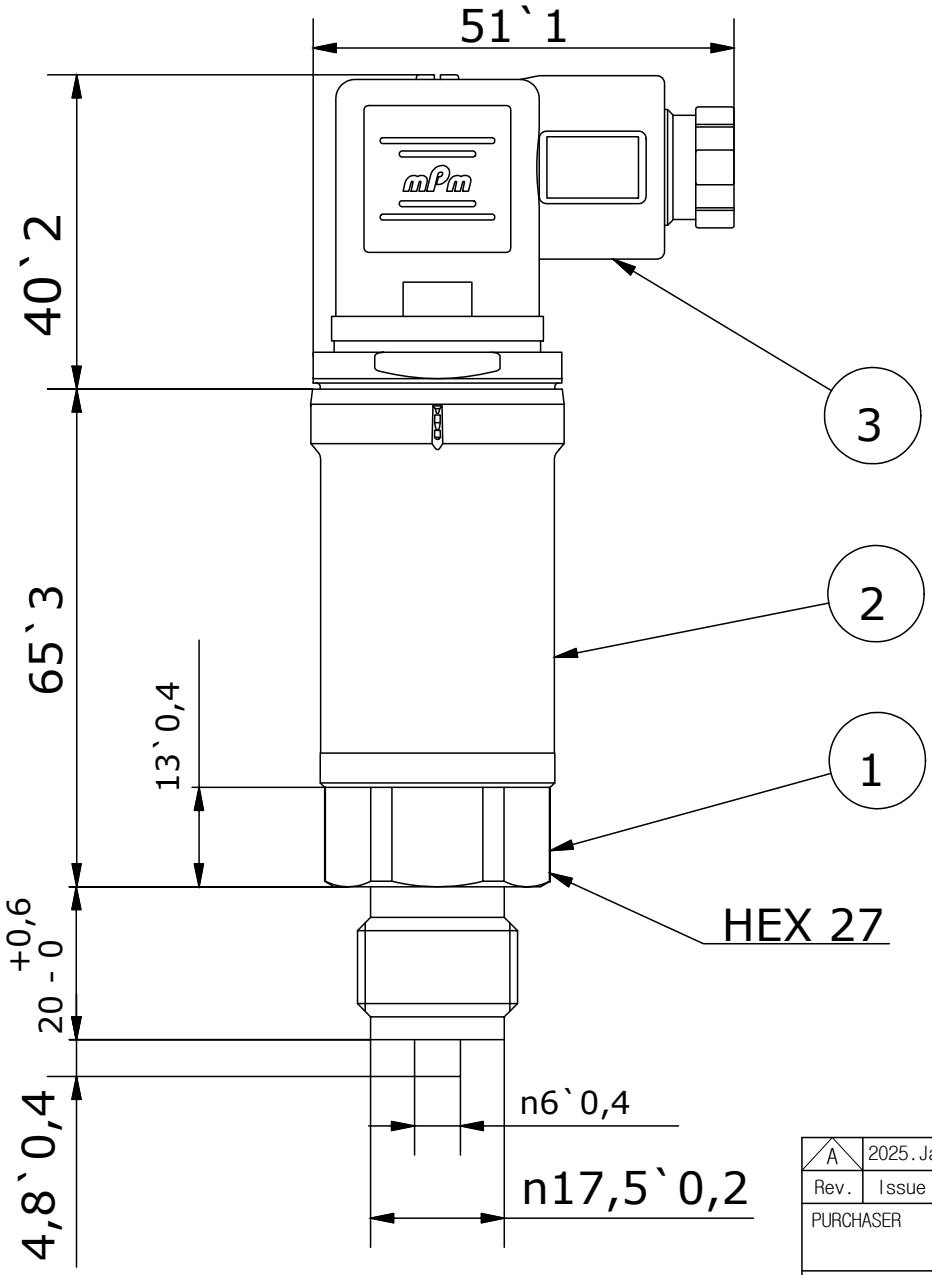

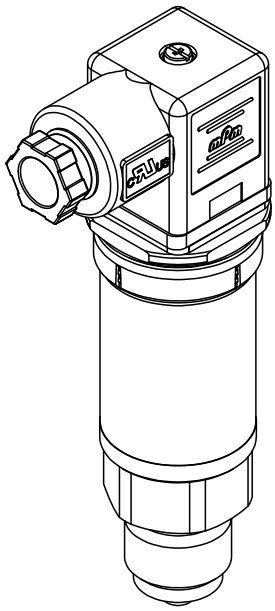

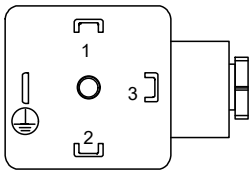

Electrical connection

Pins	Function
1	+Supply
2	-Supply
3	Not used
Earth	Connec to enclosure

Rev.	Issue Data	Description	Originator	Checked	Approved
A	2025.Jan.08	Issued for Approval	K.H.JEON	K.C.KIM	J.H.LIM

PURCHASER	HANWHA ENGINE
CLIENT	-
MODEL/TYPE ENGINE	DN100 GAS VALVE UNIT (ED-Type) X-DF / WINGD
DRAWING NO.	W5XGVU-SN2709-ITDRA-03
Instrumentation for GAS VALVE UNIT	SUPERLOK® 17, Sinsojaesandan 2-ro, Jangan-eup Gijang-gun, Busan, 46031 South Korea TEL:+82-51-780-5083 / FAX:+82-51-780-5099

Tag No. PT07	
Subject	Description
Maker	ANALYSIS Ltd
Model	PTEX1-CO-SAD-420A-B-V0.10.1-6-G12
Pressure range	-10 to 10 KPa(-100 to 100mbar)
Electrical connection	EN 175301-803-A, Pg11
Supply Voltage	11...28VDC
Output signal	4 - 20 mA
Ambient temperature	-40°C ... +80°C
Ex Protection	Ex ia IIC T4 Ga
IECEx Cert No.	IECEx EXV 21.0037X

Unit : mm

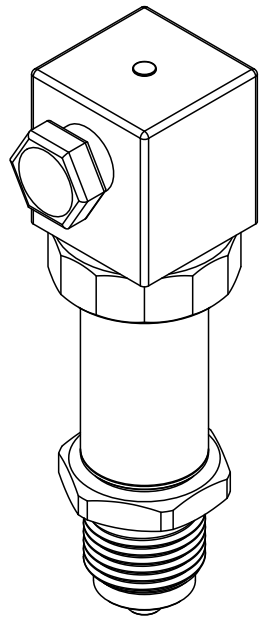

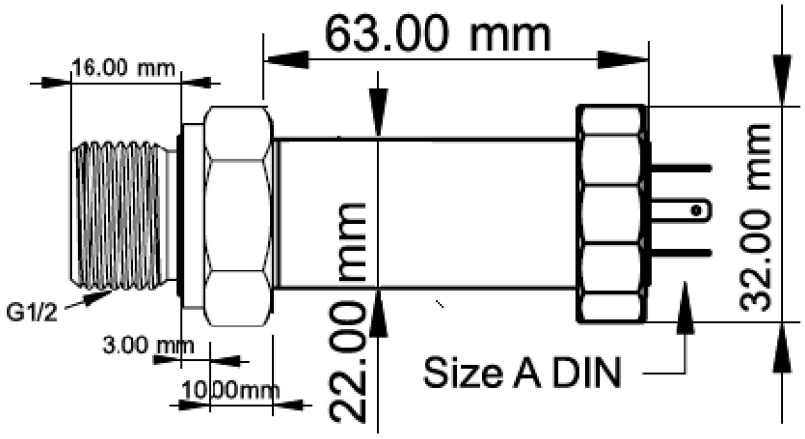

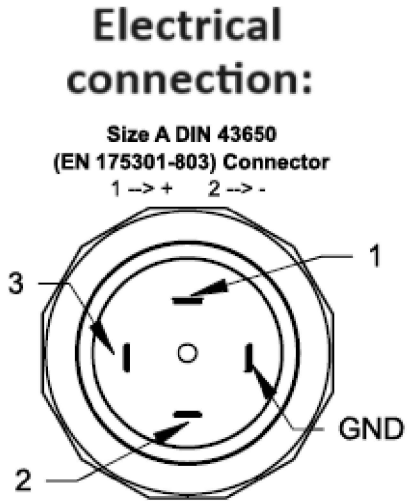

Mounting connection:
-Size A DIN 43650 (EN 175301-803) Connector
- mA OUTPUT: 1 (+) / 2 (-)

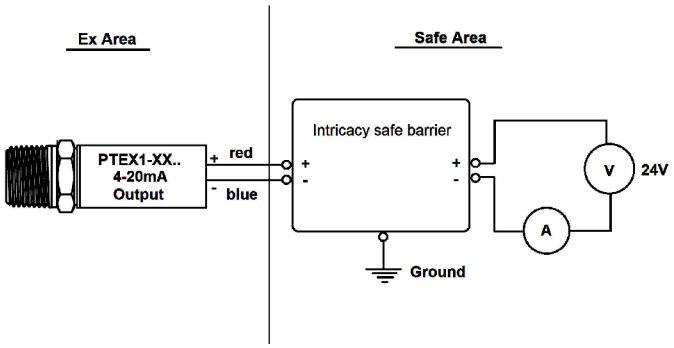

A	2025.Jan.08	Issued for Approval	K.H.JEON	K.C.KIM	J.H.LIM
Rev.	Issue Data	Description	Originator	Checked	Approved

PURCHASER	HANWHA ENGINE
CLIENT	-
MODEL/TYPE ENGINE	DN100 GAS VALVE UNIT (ED-Type) X-DF / WINGD
DRAWING NO.	W5XGVU-SN2709-ITDRA-04
Instrumentation for GAS VALVE UNIT	SUPERLOK® 17, Sinsojaesandan 2-ro, Jangan-eup Gijang-gun, Busan, 46031 South Korea TEL:+82-51-780-5083 / FAX:+82-51-780-5099

Tag No. GSO/GSC-V03 GSO/GSC-V05	
Subject	Description
Maker	PEPPERL+FUCHS
Model	NCN3-F31-N4-V1
Switching function	2 x normally closed(N.C)
Output type	NAMUR
Nominal voltage	8.2V
Ambient temperature	-25°C ... +100°C
Protection class	IP67
Ex Protection	Ex ia IIC T6 Gb
IECEx Cert No.	IECEx TUN 17.0021X

Unit : mm

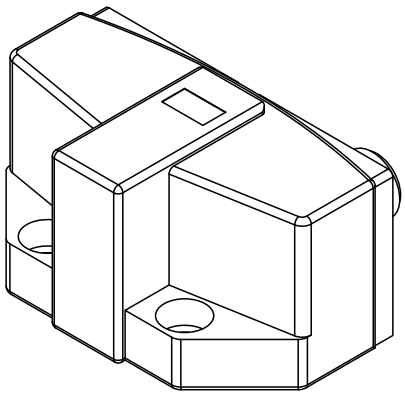

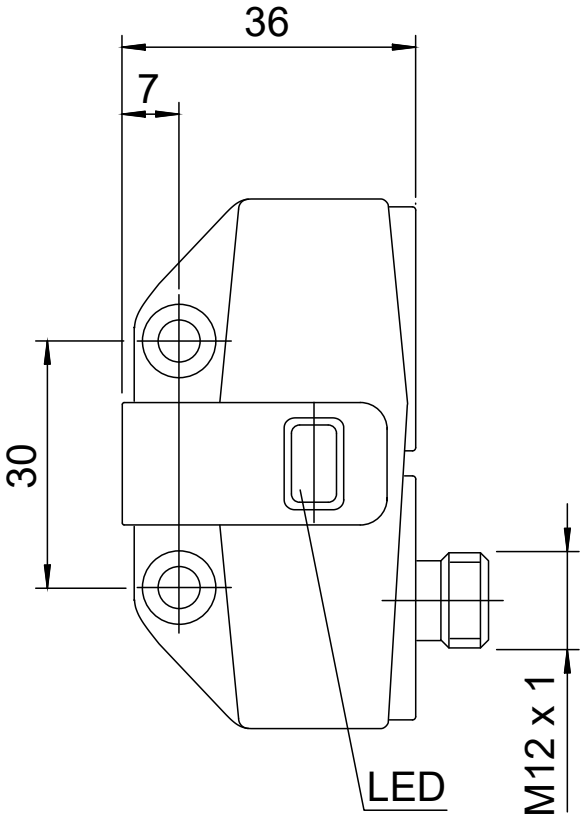

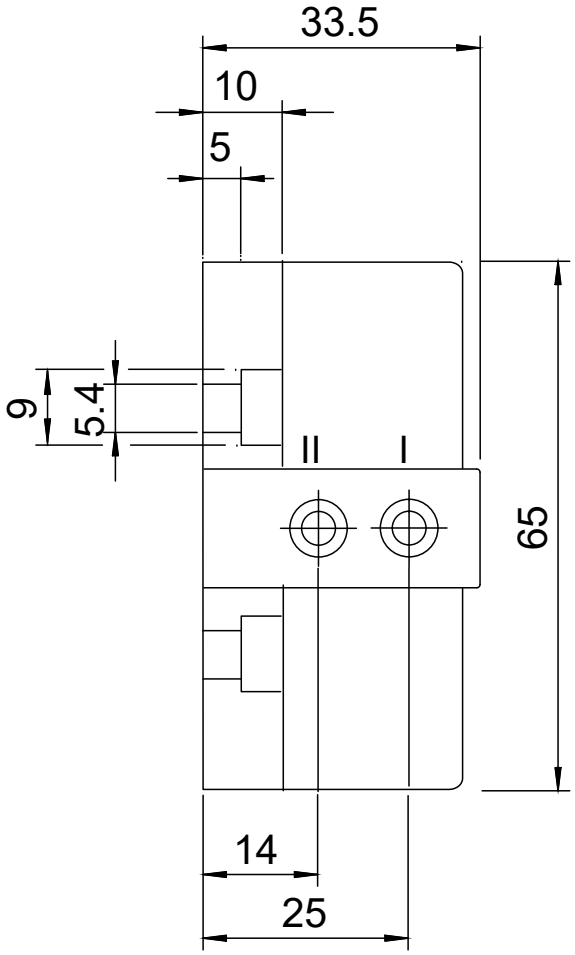

Electrical connection

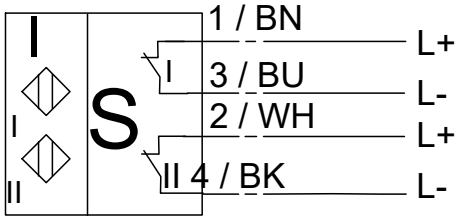

Rev.	Issue Data	Description	Originator	Checked	Approved
A	2025.Jan.08	Issued for Approval	K.H.JEON	K.C.KIM	J.H.LIM

PURCHASER	HANWHA ENGINE
CLIENT	-
MODEL/TYPE ENGINE	DN100 GAS VALVE UNIT (ED-Type) X-DF / WINGD
DRAWING NO.	W5XGVU-SN2709-ITDRA-05
Instrumentation for GAS VALVE UNIT	SUPERLOK® 17, Sinsojaesandan 2-ro, Jangan-eup Gijang-gun, Busan, 46031 South Korea TEL:+82-51-780-5083 / FAX:+82-51-780-5099

Tag No. GSO/GSC-V02 GSO/GSC-V04 GSO/GSC-V07 GSO/GSC-V14 GSO/GSC-V15	
Subject	Description
Maker	PEPPERL+FUCHS
Model	NCN3-F25-N4-V1
Switching function	2 x normally closed(N.C)
Output type	NAMUR
Nominal voltage	8.2V
Ambient temperature	-25°C ... +100°C
Protection class	IP67
Ex Protection	Ex ia IIC T6 Ga
IECEx Cert No.	IECEx TUN 17.0021X

Unit : mm

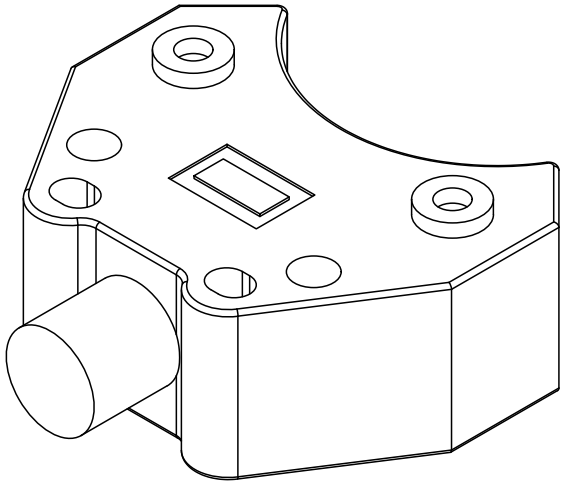

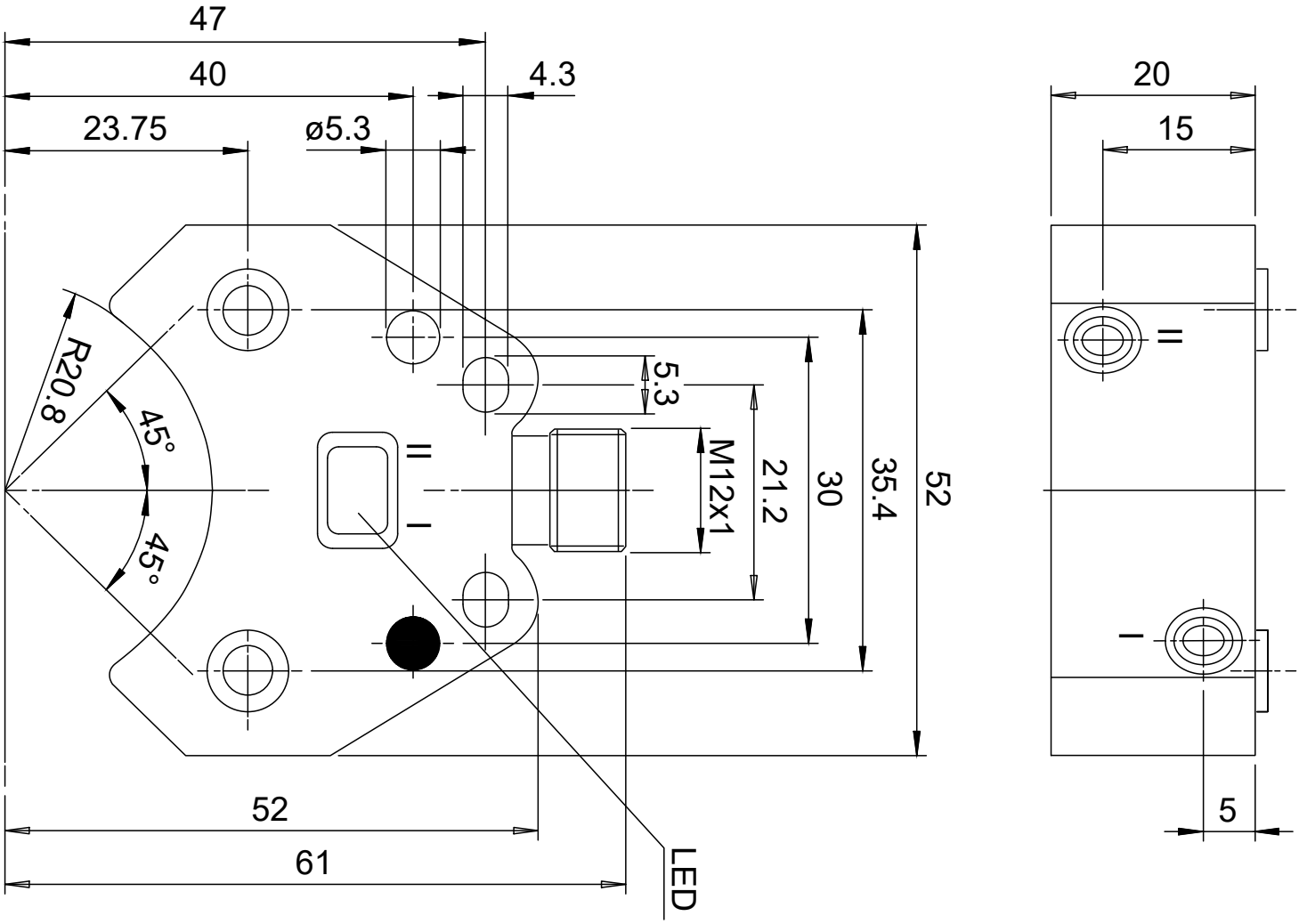

Electrical connection

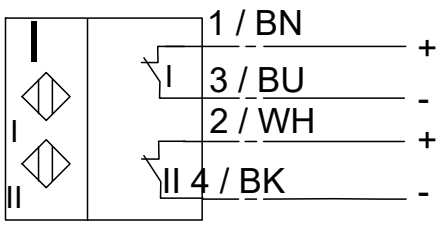

Rev.	Issue Data	Description	Originator	Checked	Approved
A	2025.Jan.08	Issued for Approval	K.H.JEON	K.C.KIM	J.H.LIM

PURCHASER	HANWHA ENGINE
CLIENT	-
MODEL/TYPE ENGINE	DN100 GAS VALVE UNIT (ED-Type) X-DF / WINGD
DRAWING NO.	W5XGVU-SN2709-ITDRA-06
Instrumentation for GAS VALVE UNIT	SUPERLOK® 17, Sinsojaesandan 2-ro, Jangan-eup Gijang-gun, Busan, 46031 South Korea TEL:+82-51-780-5083 / FAX:+82-51-780-5099

Tag No. FT01	
Subject	Description
Maker	Endress+Hauser
Model	Promass F 500, 8F5B50
Flow principle	Coriolis
Design pressure	1.6MPa(16bar)
Design temperature	0°C ... +60°C
Supply voltage	24VDC
Input/Output signal	4 - 20mA
Protection class	IP66/67
Ex Protection	Ex db IIC T6...T5 Gb
IECEx Cert No.	IECEx CSA 16.0034X

Unit : mm

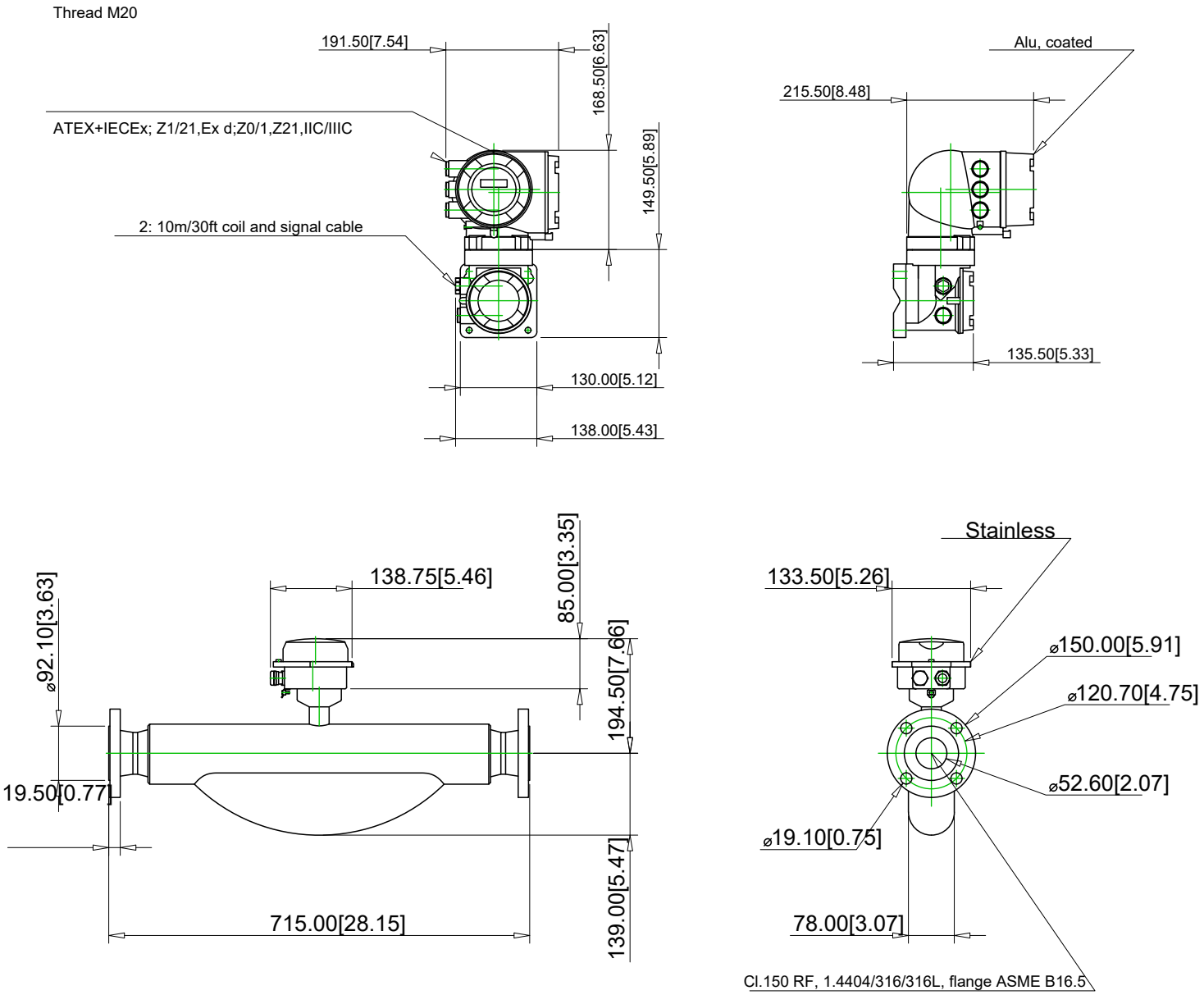

Rev.	Issue Data	Description	Originator	Checked	Approved
A	2025.Jan.08	Issued for Approval	K.H.JEON	K.C.KIM	J.H.LIM

PURCHASER	HANWHA ENGINE
CLIENT	-
MODEL/TYPE ENGINE	DN100 GAS VALVE UNIT (ED-Type) X-DF / WINGD
DRAWING NO.	W5XGVU-SN2709-ITDRA-07
Instrumentation for GAS VALVE UNIT	SUPERLOK® 17, Sinsojaesandan 2-ro, Jangan-eup Gijang-gun, Busan, 46031 South Korea TEL:+82-51-780-5083 / FAX:+82-51-780-5099